SHIFT LEVER AND CONTROL CABLE

MX09V–02

COMPONENTS

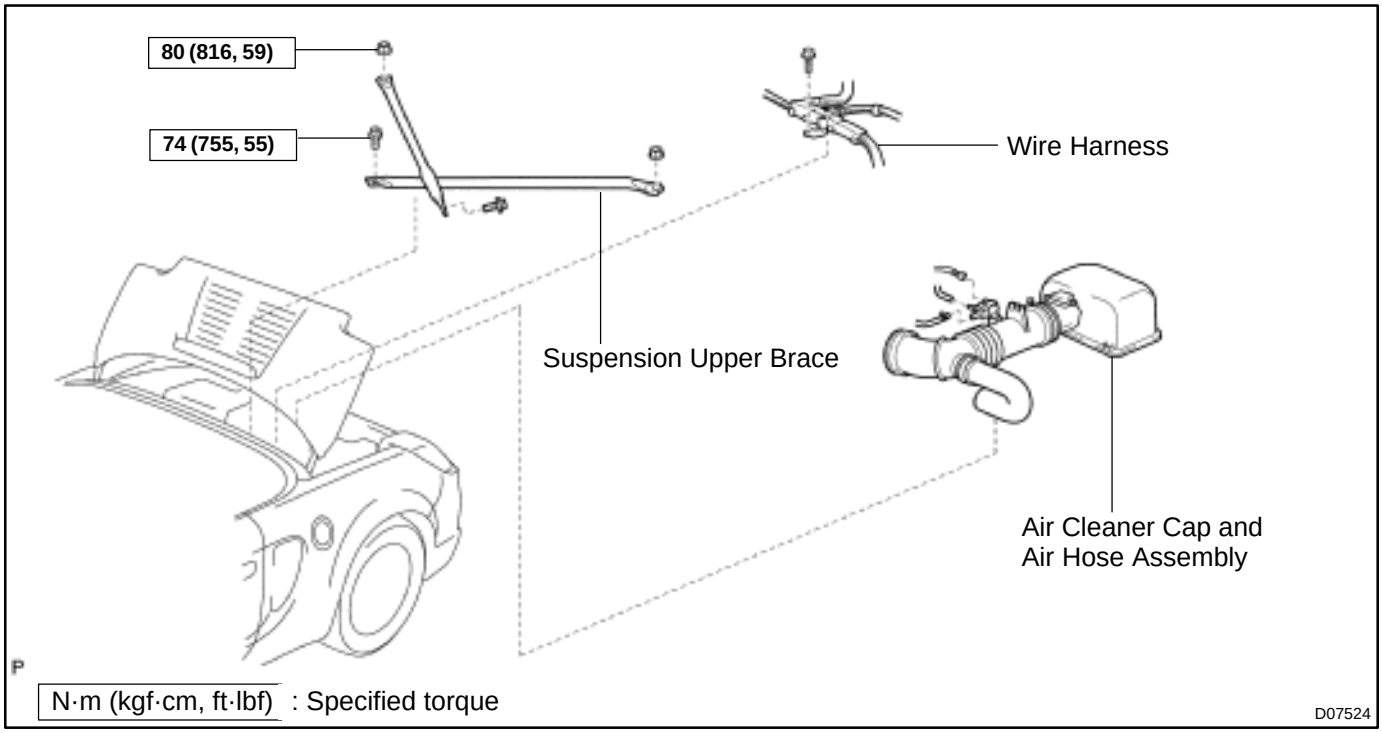

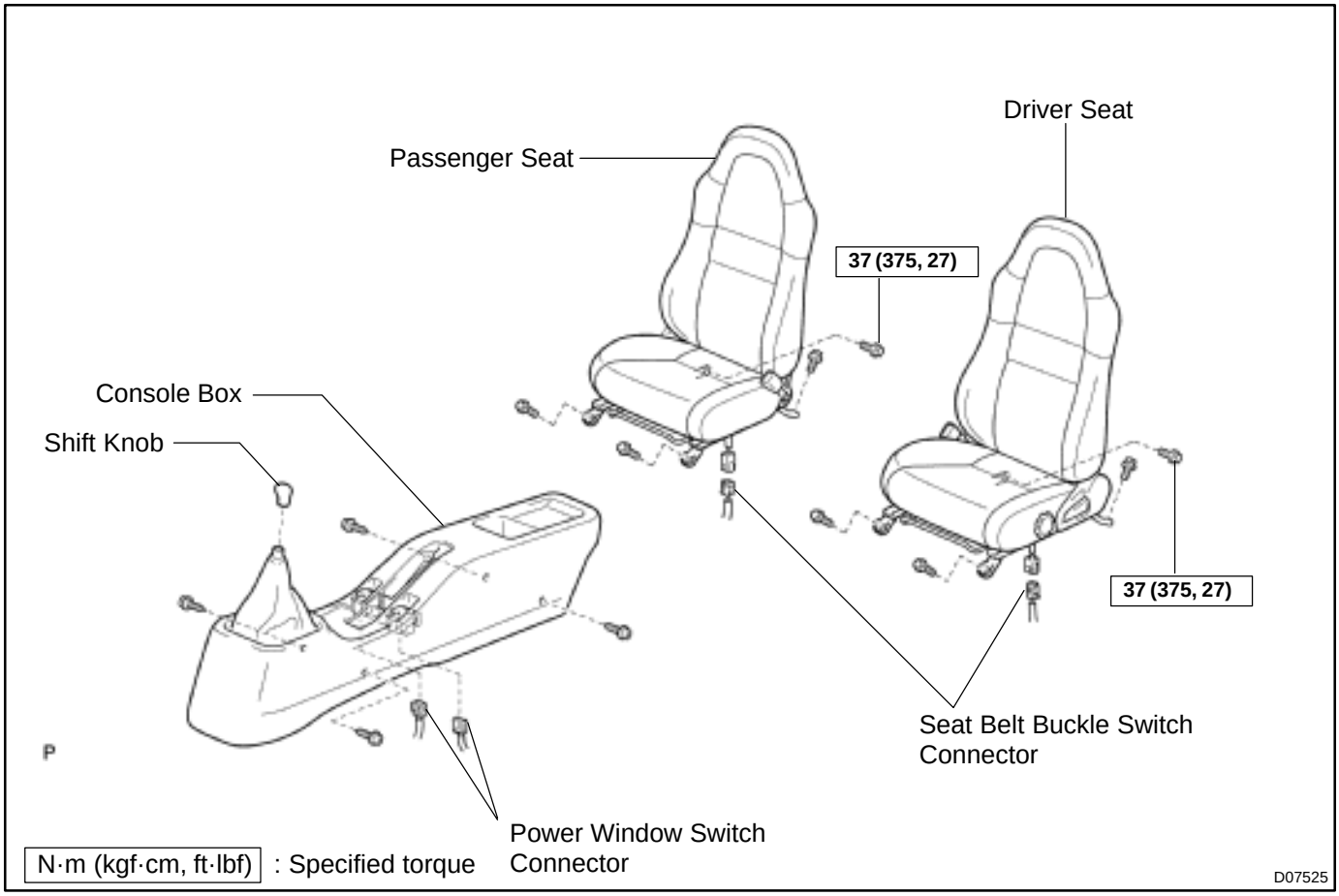

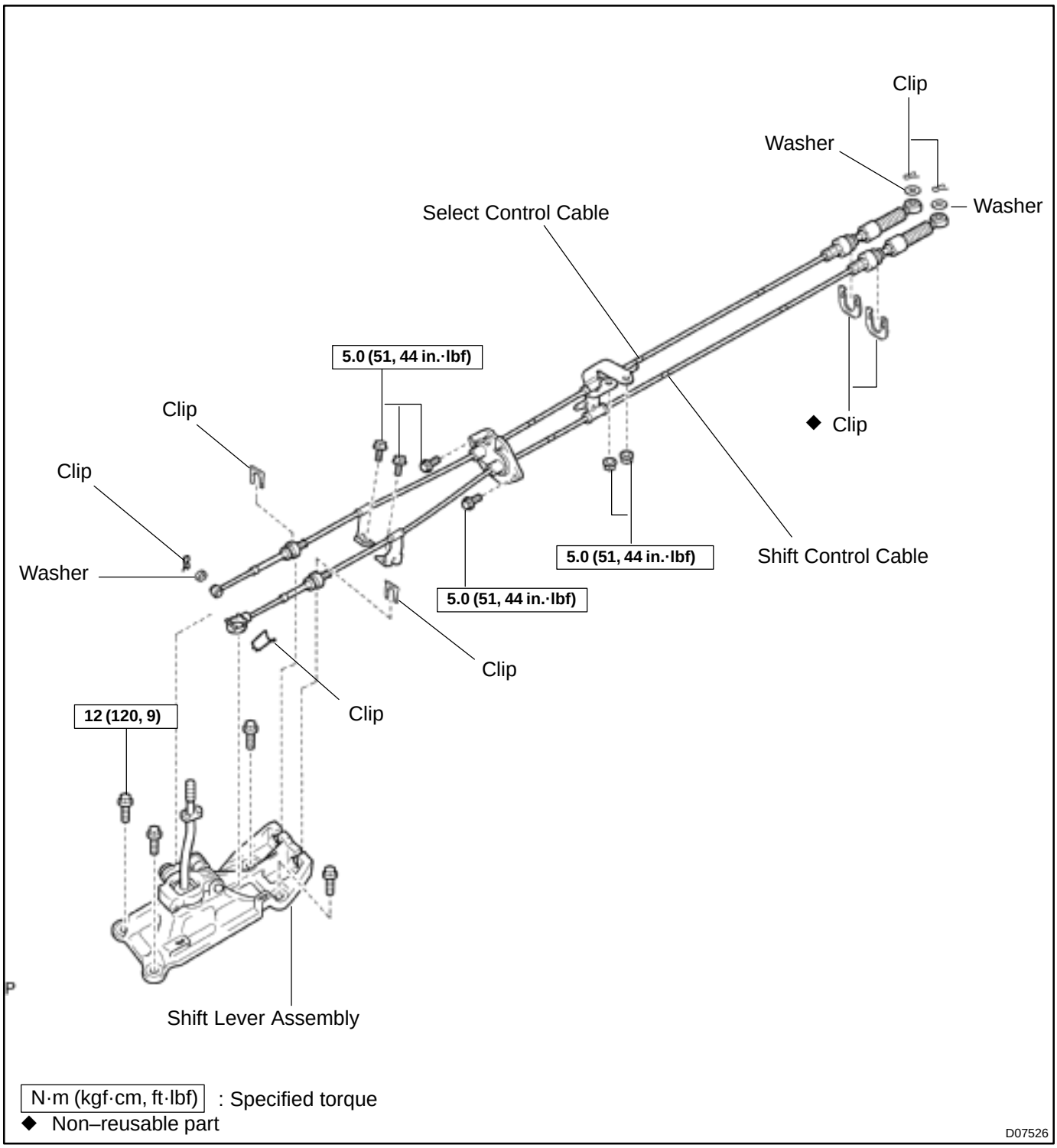
Clip
Washer
Washer
Select Control Cable
5.0 (51, 44 in.·lbf)
Clip
◆ Clip
Clip
5.0 (51, 44 in.·lbf)
Shift Control Cable
Washer
5.0 (51, 44 in.·lbf)
Clip
Clip
12 (120, 9)
Shift Lever Assembly
N·m (kgf·cm, ft·lbf) : Specified torque
◆ Non–reusable part
D07526